SMARC-sXBTi

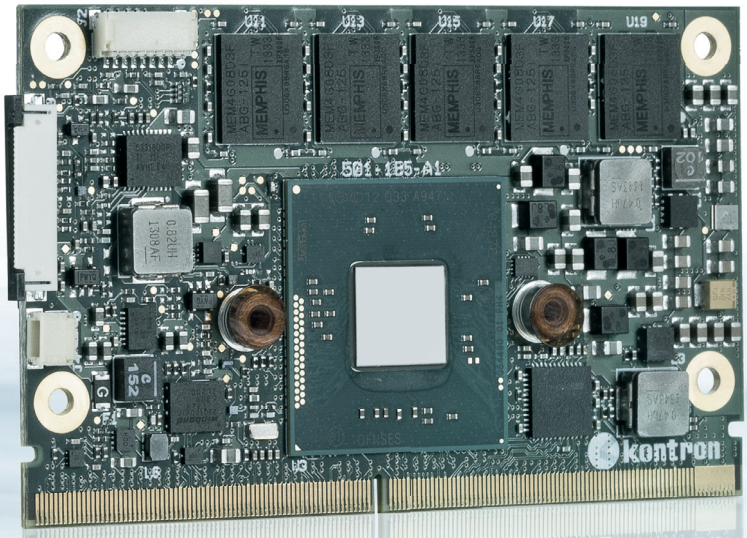

Intel® Atom™ E3800 SERIES

- up to 8GB DDR3L memory down (ECC optional)
- 1x USB 3.0, 3x USB 2.0 (optional 1 OTG)
- eMMC Flash, SDIO, 2x SATA
- industrial grade temperature

POSSIBILITIES START HERE kontron

TECHNICAL INFORMATION

DIMENSIONS (H X W X D)	82 x 50mm
CPU	Intel® Atom™ E3845, E3827, E3826, E3825 or E3815
MAIN MEMORY	Up to 8GB DDR3L-1333 memory down (ECC optional)
GRAPHICS CONTROLLER	Intel® HD Graphics (Gen7)
ETHERNET CONTROLLER	Intel® i210IT
ETHERNET	10/100/1000 MBit Ethernet
SATA	1x SATA 3Gb/s
FLASH ONBOARD	2-64GB eMMC
PCI EXPRESS® / PCI SUPPORT	3x PCIe x1
PANEL SIGNAL	LVDS Single Channel 18/24 bit or eDP, HDMI or DP
USB	3x USB 2.0 1x USB 3.0 (via AFB)
SERIAL	1x RX/TX (Ser0) 2x UART (Ser1/3)
INTERFACE	HD Audio and I2S, 5x I2C, 2x SPI, Camera Interface (2x MIPI CSI)
OPERATING SYSTEM	Windows® 8, Windows® 7, WE8S, WES7, WEC7, Linux, VxWorks
POWER SUPPLY	3V - 5.25V Operates directly from single level Lithium Ion cells or fixed 3.3V or 5V power supplies
TEMPERATURE	-40°C to +85°C operating, -40°C to +85°C non-operating
HUMIDITY	93% relative Humidity at 40°C, non-condensing (according to IEC 60068-2-78)

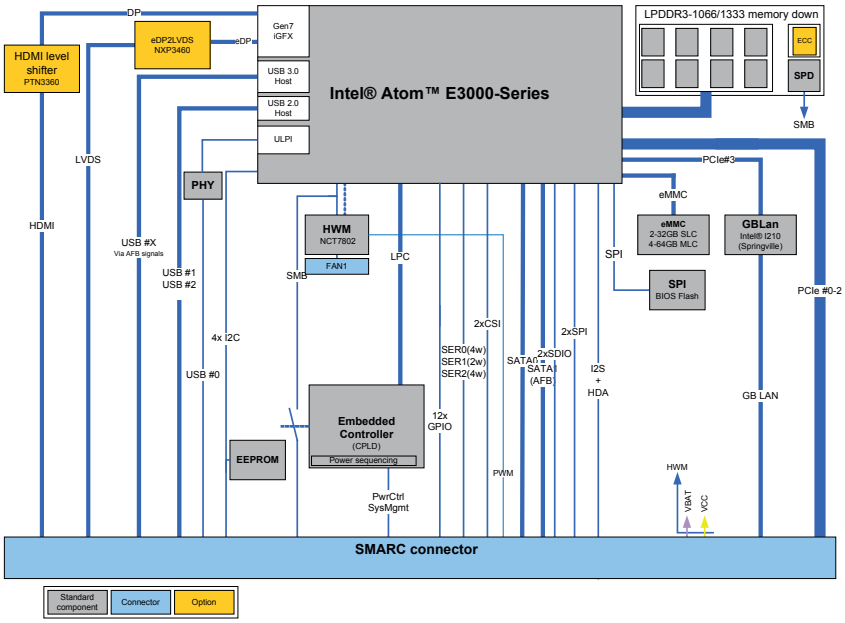

CORPORATE OFFICES

EUROPE, MIDDLE EAST & AFRICA

Lise-Meitner-Str. 3-5
86156 Augsburg
Germany
Tel.: + 49 821 4086 0
Fax: + 49 821 4086 111
info@kontron.com

NORTH AMERICA

14118 Stowe Drive
Poway, CA 92064-7147
USA
Tel.: + 1 888 294 4558
Fax: + 1 858 677 0898
info@us.kontron.com

ASIA PACIFIC

1~2F, 10 Building, No. 8 Liangshuihe 2nd Street,
Economical & Technological Development Zone,
Beijing, 100176, P.R.China
Tel.: +86 10 63751188
Fax: +86 10 83682438
info@kontron.cn

Copyright © 2015 Kontron AG. All rights reserved. All data is for information purposes only and not guaranteed for legal purposes. Information has been carefully checked and is believed to be accurate; however, no responsibility is assumed for inaccuracies. Kontron and the Kontron logo and all other trademarks or registered trademarks are the property of their respective owners and are recognized. Specifications are subject to change without notice. SMARC-sXBTi-20150701-WMH